CODPOD:
COMPACT OBSERVATORY DIVING

blackthunder Designs

Blackthunder Designs
Dyson School of Design Engineering
June. 2017

Design Engineers:
Ryan Dai, Robert Hyde, Omer Quadri, Oli Thompson, Federico Tiersen

Table of Contents

Executive Summary

This report outlines and evaluates the design process from initial prototyping to the final interior mock-up of the Compact Observational Diving (COD) Pod. The COD Pod is a submarine which will provide tourists with a revolutionary reef exploration experience. It aims to educate tourists about the Great Barrier Reef and the ecological problems that it faces.

To compete with existing competitors in the same market, such as scuba diving and glass-bottom boats, we prioritised user experience in our designs. This was achieved mainly by optimising the user's field of view and by developing an intuitive interface.

A significant niche that the COD Pod fills is that it is able to accommodate anybody who is unable or unwilling to dive or swim, but still wants an immersive diving experience. Therefore the COD Pod was designed to include very diverse user groups. To do this, we used anthropometric data and design features that would make the pod accessible to the vast majority of the population.

In order to maximise user experience and to further the inclusiveness of our COD Pod's interior, iterative design techniques were used considering the results of rigorous user testing. The initial stage was a cardboard prototype of the interior, based on a CAD model. Then as we began the 7 week build, every interior element was prototyped and evaluated through user testing, before being finalised.

Our finished mock-up displays functioning, full scale models of the lift, chair and user interface. Also included is a representation of the glass dome, a curved vertical panel, due to the size restrictions of our build.

Introduction

We are Black Thunder, a London-based team of five design engineers from ICL. We previously developed our concept and business model in our contract book. This report focusses on the design and build process of the mock-up of our COD Pod: from theoretical design based on anthropometric data and market research, to iterative testing of cardboard prototypes, to our developed full-scale mock-up of the COD Pod interior.

COD Pod Rationale

The fundamental rationale behind the COD Pod is that the immersive underwater experience from diving should be easily accessible and safe for anyone, because diving is risky, requires training and needs significant preparation.

The Great Barrier Reef, one of the most beautiful coral reef systems in the world, is a popular location for diving. As such, the COD Pod naturally fits as a tourist activity there. The COD Pod would have many benefits for the Great Barrier Reef, namely:

- Increase the awareness and sympathy for its decline through education
- Generate revenue to be donated to the GBR Foundation
- Promote a benign mode of exploration of the reef

Concept presentation

Target audiences/Stakeholders/Users

The COD Pod aims to offer a revolutionary reef exploration experience, whilst driving the world's transition to sustainable tourism. It aims to provide the diving experience for everybody, including those unwilling or unable to scuba dive. It will assist in preventing further ecological damage to the reef by offering an alternative for tourists who often disturb the ecosystem whilst diving or snorkeling.

Offering the perfect compromise between adventurous exploration and comfort, the COD pod targets an extremely large market: anyone who can walk, use a seat and some simple intuitive controls. Priced at less than 100 AUS, a tour will be affordable to the vast majority of tourists who go to tropical locations.

The business will be launched in the Great Barrier Reef on numerous hotels and resorts on islands in proximity to reefs. Subsequent expansion to other tropical

tourist hotspot locations will be possible. The number of potential customers is enormous: recent figures suggest that the Great Barrier Reef has over 2 million annual visitors, with 70% them going to Cairns.

There is a large gap in the market as the majority of these visitors see the reef, but do not explore it in depth. Traditional ways to explore a reef are limited to scuba diving, helmet diving, snorkeling and glass-bottom boats. Only scuba diving provides a fully immersive experience, but it is exclusive to a niche demographic: it requires a certain level fitness and a large investment both in terms of time and money. The COD Pod aims to provide an experience that matches the full scuba diving experience, whilst being as comfortable as a glass-bottom boat trip.

Furthermore, studies show that 82% of tourists would like to learn more about the reef and the ecosystem it supports - another potential niche for the COD Pod to fill. The COD Pod project would be funded in part by the Australian government and the Great Barrier Reef Foundation. It is in both organizations' best interest to promote a safe way for tourists to explore the reef, while maintaining and increasing tourism in the area and educating people about the environmental issues that continue to damage the reef.

System overview/ Vehicle concept and features

COD Pods will be based in docks of hotel and resort islands in or near the Great Barrier Reef. The tour structure is as follows: (For a visual explanation of the following process, see 'demonstration/ key scenarios of use' section of report.)

- Tours begin with a 5 minute brief, in which the customer is instructed about the pod's functions and safety procedures.
- The user then steps from the dock onto the rear of the roof and reaches the lift platform through the hatch.
- The lift takes the user down onto the floor.
- The user sits on the chair that is initially facing backwards towards the rear. The chair has been set to the user's height automatically prior to ingress.
- After buckling the seatbelt, the seat automatically rotates 180 degrees and locks itself into position so the user faces the glass dome.
- The user selects which reef to travel to on the tablet.
- The pod travels quickly towards the selected reef. This may take about 10 minutes.
- At the reef, the pod travels slowly and closer to the sea bed.
- After 45 minutes of sightseeing in the reef, the pod will return to the island, where the user exits the pod in the same way they had entered it.

During the tour the user has the following options:

- While the pod is travelling slowly, the user can stop the pod and adjust its orientation using the joystick to get a better view.

- The user may select fish or coral for information to be displayed about them. This is done by tracking the user's pointing hand and eye level, and coordinating with the sensors and recognition system.
- In emergencies or when panicked, a user has access to the following safety procedures: rising to the surface, returning to a dock or calling an operator who may control the pod remotely.
- In certain areas, the user may alter their path via the tablet controls.
- The user may use the tablet controls to enable (group) communications between pods. This enables friends, families and couples to share the experience and ensure each other's safety and comfort.
- At any time, users can view their position and the position of other nearby pods on a map on the tablet.

Development Challenges

Theoretical Design

We began our design by considering how we would optimise user experience, accessibility and comfort based on our intuition, knowledge and background research. The overall layout of the pod's interior was designed to maximise the field of view and to simplify ingress and egress.

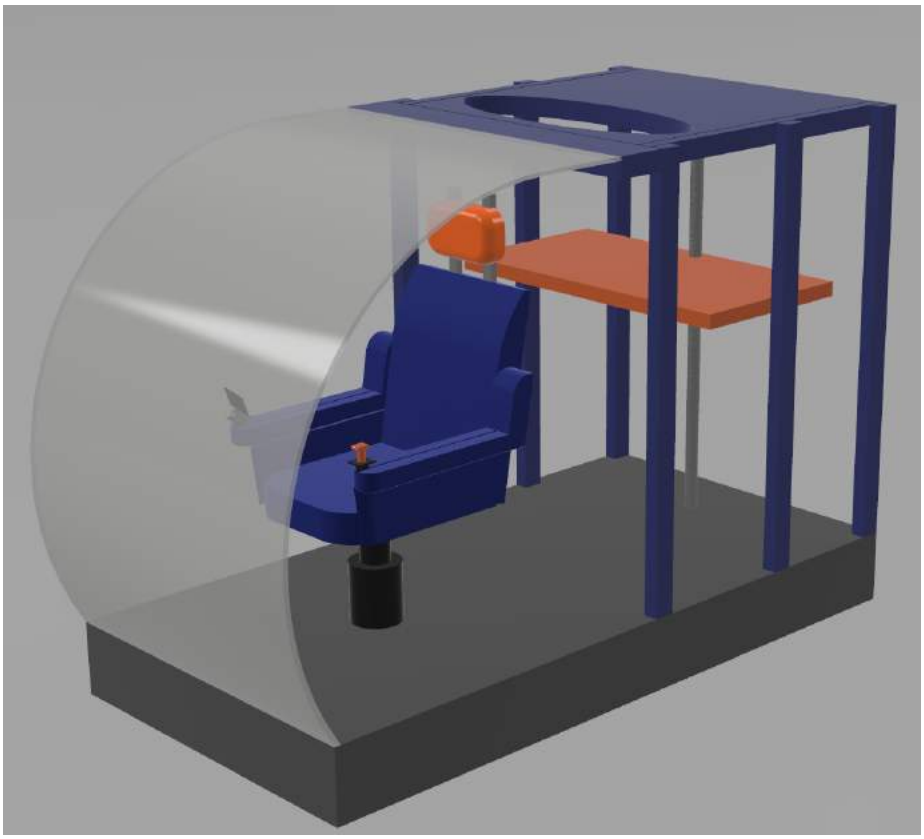

Figure 1- COD POD Interior CAD Rendering

Then we conceived the following additional features, listed in Table 1 in order of testing and development importance.

Hierarchy of HF, UX/UI & Functional Factors

The features below all belong to one of three main categories - the chair, the ingress/egress system and the user interface - which were developed simultaneously.

Point to Test/Explore/Develop	Priority
Glass sphere field of view	5
Emergency control positioning	5
User interface	5
Positioning of tablet and control device	4
Lift orientation	4
Information Projection	4
Interior Comfort	3
Comfort of ingress/egress	3
Seat Inclination	2
Information Audio	1

Table 1- Hierarchy Of Points

User experience is the most important aspect of any recreational vehicle, including the COD Pod. However, as this is hard to measure as a singular parameter, we have split it up into the components which contribute to it the most - Glass sphere view, Orientation controls, Interface, Main tablet controls. As shown in the table above, these features were prioritised above all others throughout the design process.

Interior Spacing Development

How the different components featured above fit together is an essential part of the user experience. We had to fit all of these features into a 2x1x1 meter space for our mock-up, so how these features were arranged had to be carefully

considered at all times during the design phase. From the start, it was clear that to maximise viewing experience, we needed to use a glass half sphere (or dome) for the viewing window. This would allow the user to have a completely unrestricted view without needing to drastically move their viewing position during the dive. To maximise the immersive experience of the glass dome, we designed a raised platform for the chair, so the user's head is positioned at the center of the dome. This allows for the glass to be equidistant from the user at all times, so not distorting their view through the glass. This has the added feature of improving the accuracy of the fish tracking system.

To increase the trust of the user in our submarine, we designed the viewing window to be positioned at the front of the sub. This allows for the user to see where they are going and what is in front of them. This also allows for our route selection part of the UI to be as reactive as possible to the user, as the user can easily change route depending on what they can see. By necessity, the ingress and egress system had to be in the back portion of the Pod. The chair rotates through 180 degrees, and locks in place, to allow for ease of access.

A submarine has inherent risks, and so safety measures must be in place, in particular, an emergency switch. This suggestion is also supported by our user testing which showed that the users wanted a mechanical and electronic system that in an emergency will cause the COD Pod to float to the surface of the water. The location of the emergency switch was not straightforward for a number of reasons. Firstly, the spacing between the chair and the dome was designed so that the user cannot touch the dome to minimise the risk of damage to the dome, which meant that there was nowhere other than the chair to put it within an arm's reach. Secondly, placing the emergency switch on the chair might cause it to be pressed accidentally. Thirdly, placing it on the underside of the chair means that it is out of sight, so it is not immediately recognisable in a dangerous situation. Finally, having the switch integrated into the tablet would be disastrous should the tablet fail. The solution is having a system based on the pull-cords in disabled bathrooms. We attached a string, with a handle on the end, to the roof of the COD Pod, which then dangles just above the user's head, but not so that obstructs the view of the user. They can then pull this string when in an emergency, thereby mechanically starting the emergency procedure.

Chair Development

Ergonomics and comfort are important aspects of the user experience, as these are easily felt by any user, and an uncomfortable chair would be unpleasant and a distraction to the viewing experience. The design of the COD Pod chair is optimised for these traits, since the user may be seated in the Pod for long periods of time.

The design of the chair was developed by studying age and location relevant anthropometric data. Our findings were consolidated and used to design a chair that is comfortable for the widest possible range of users, from a fifth-percentile female to a 95th percentile male. A cardboard prototype was constructed and tested. Some minor adjustments were made on the cardboard mock-up following extensive user testing and feedback:

- Padding between the user and the seat of the chair was added; as the hard material became uncomfortable after prolonged periods of time.
- Seat of chair was further shaped; as after a period of time in a forward sitting posture, too much weight was carried under the thighs, making it uncomfortable.
- Arm rests were made longer so that the UI features could be moved out of the way.

Once satisfied with every feature and dimension of the design we began to fabricate the prototype chair. Due to machinery and time restrictions, the hydraulic lift mechanism from an office chair was retrofitted to the base of the mock up to provide a rotating and laterally adjustable base on which the chair would be built. A pulley mechanism with a small handle was manufactured in accordance to several user suggestions so as to improve access to the paddle that adjusts the height of the office chair.

Having positioned the 50th percentile for the popliteal height at the median height travel of the mechanism; we could ensure that the range of adjustment best fit the anthropometric height distribution. The chair's position within the mockup was calculated both to maximise the viewing angle for the user and to ensure that the user's feet wouldn't extend over the raised platform (causing the feet to dangle and create pressure on the thigh, or obscure the view of the reef). The 95th percentile of buttock popliteal length was used to determine this positioning. Our material choice for the chair utilised a layered structure to combine the favourable properties of the 4 materials we used; plywood for strength, modelling foam which could be easily shaped to fit the user's body, upholstery stuffing to provide cushioning and an extra layer of comfort, and finally blue and orange lycra material to form the surface of the chair and match the mock up's aesthetic to our brand's style and colours. The chair features 2 other adjustable dimensions which were calibrated using the same method as described earlier; the positioning of the headrest can be adjusted up and down along an axis 11 degrees from the inclination of the back rest. The joystick and tablet controls can also be adjusted horizontally across 95% of the elbow to finger anthropometric data, as well as having extended travel to allow the user to push either input method out of reach when not in use. User feedback necessitated the repositioning of both components to satisfy the widest range of users. Friction slides and draw slides respectively were used to represent this motion.

Ingress/ Egress Development

How the user enters and exits a vehicle can massively impact their experience before the journey has even begun. For example, if the door space is too small, a taller person may feel cramped and hot within the interior, even if it is large enough to accommodate them. Our understanding of this and other relevant issues necessitated the design and prototyping of a quick, low stress ingress and egress. We felt that the user feeling a sense of descending underwater upon ingress would contribute to the COD Pod experience of an adventurous, genuine and explorative environment. Air-locks or submarine hatch would both be ways to achieve this. Initially, we designed the COD Pod's ingress/ egress hatch on the side of the Pod. However in order for the side of the vehicle to be lifted out the water (e.g. a crane or accompanying boat rather than a simple jetty) or having large rafts attached to the bottom of the COD Pod so that balances above the water, we decided that this wouldn't be feasible due to business, mobility and cost restrictions. We then redesigned the hatch to be on top of the Pod, as this allows most of the Pod to remain underwater and hence allow for easy access via a pier. Further advantages of having the hatch on the top are that as the user enters feet first, a smaller hatch can be used, rather than a larger walk-through opening, and this will also help with the desired explorative feeling to the ingress process.

Our decision to locate the ingress/ egress hatch at the top of the COD Pod meant that we needed a simple, easy-to-use method of transporting the user vertically, so that they can reach the seat. Initially a ladder was implemented into our cardboard prototype. However user testing revealed this:

- Ladder felt unsafe. The user, especially if young, or the ladder accidentally got wet, could easily fall off and injure themselves.
- Ladder doesn't accommodate for elder users of the Pod well. They are sometimes frail and lack the strength to hold on to/climb up the ladder.
- Ladder doesn't accommodate for physically impaired users well. And as part of the business model is so people who cannot dive can still see the reef, using a ladder would remove a potential market segment.

We then had to redesign the ingress/ egress portion as we discovered that using a ladder is not ideal. Consulting our supervisors, we decided using a lift platform still allows for the ingress/ egress at the top of the Pod, but also removes the risk of the user climbing a ladder. This lift takes the user from hatch level to seat level for the ingress, then stays down to provide additional flooring for the user. During the egress process, the lift takes the user up to hatch level, with a small step required for the user to exit to the roof of the Pod and return to the jetty.

The main consideration for the lift was ensuring a suitably large surface area that could be positioned at a comfortable level for the user to stand on when getting in and out of the seat, once the dimensions had been established we then had to represent how the lift would move. In reality the lift would likely use hydraulics to move up and down. To accurately demonstrate this mechanism

would have been too costly and time consuming, so as an alternative, a 12V DC motor was used to control the lift by turning a piece of threaded rod seated in 2 bearings. This movement works as a linear actuator and moves a captive nut up and down onto which the lift platform could be mounted. Given that each rotation gave a millimeter of vertical movement it was necessary to choose a motor with a specific RPM which would allow the lift to move at the correct speed. The lift platform was fashioned into a fish shape which matched our logo in order to enhance the brands identity and make the COD Pod feel more personable and fun. A fluorescent orange colour was chosen to aid visibility and make it more obvious as to where the user should step. In reality the lift mechanism would have greater platform space and hand rails for the user to hold on to, but due to the limitations of the chosen mechanism some space was used to house the threaded rod.

User Interface Development

As a group, we starting creating the UI based on assumptions and the technology that we had available. However, this led to a disconnect between the user and the experience of the COD Pod. Their experience became more like a documentary than actually being in, and exploring the real reef. To counter this, we went back to the basics with a human-centered design of our UI. We did this by having several focus groups. In these groups we asked our potential users many open-ended question about the experience they have had scuba diving, and what would enhance it. We then used this information to guide our UI design, so that it accommodates and broadens the existing user experience. This allowed us to integrate technology into the COD Pod, without sacrificing the the very real, raw, personal exploration experience that can be achieved through scuba diving. From these sessions we received this feedback:

- Viewing freedom and closeness to reef life was the most frequent answer.
- Safety and the knowledge of safety, for the user and who they had come on the trip with, was the second most frequent answer.
- Keeping a record of the trip, either through photos, videos, or souvenirs is what the potential users said would enhance their experience the most.
- Interestingly, no user mentioned about obtaining information about the fish. However, as this is crucial to increasing awareness about the problems facing the Great Barrier Reef as well as adding to the interactivity and cohesiveness of the experience, we decided to keep this feature.

The viewing freedom and closeness to reef life is discussed about in above sections of the COD Pod development. Also, keeping a record of the trip is something that can be discussed in the business model, as it involves user permission to take photos, gift shop sales, etc. However safety is a key feature that we have included in our UI interface as a direct result of these sessions. As well as the mechanical emergency lever, as explained above, we also included electronic safety and safety reassurance features in our UI:

1. The ‘INFO’ section in the tablet UI enables the user to see key statistics about the COD Pod (e.g. oxygen levels and time left of journey), so that they may be reassured that they are safe at all times.
2. On the overhead map screen, other Pods can be displayed at their current location so that if the user is concerned about family member, they may reassure themselves by checking where they are on the map.
3. A FAQ button, inside the ‘HELP’ section, to answer some initial fears about user safety.
4. A ‘Return Home’ button, in the ‘HELP’ section, enables the user to cut their trip short and head back to the dock, incase of panic/ fears that are not life-threatening.
5. An ‘Emergency Button’ also exists, in the ‘HELP’ section. This acts in the same way as the emergency lever.
6. And lastly, a ‘Talk’ button, in the ‘HELP’ section, so that the user can talk to a technician at the dock about any questions raised in the interest of safety.

These features were specifically designed to enable the user to feel more comfortable and focus less on their safety, so that they may be more immersed in the COD Pod experience.

Aside from the tablet and information projection, the other key input for the user interface is that of the pod orientation system. Originally we had the idea of implementing a trackball that could be rotated by the user. The pod would then mirror the movement of the trackball, up to a safe limit - this would enable a full range of movement and control of the pod. Following consultations with potential users, the conclusion was that this was not particularly intuitive or enjoyable. The common consensus was that a joystick should be implemented. Not only does this grant a lot of affordance, as a joystick is recognised as a movement-controlling device, but users found that it was fun to use and made the experience feel more fun, almost like a game. We made the decision to accept the user's’ judgment and implemented a joystick. Further decisions were made, such as the location being on the left side as the tablet has priority and requires more dexterity, it should feature a trigger that must be pulled to activate the rotational controls, it should feature a reset button to level the pod’s orientation, and it should light up when activated to give the user visual feedback.

Developed Design

The design may be further understood by looking at the CAD and sections of the UI in the mock-up. These are provided below.

Developed Layout And Embodiment

Figure 2- COD POD Ingress Rendering

Figure 3- COD POD Dock Management

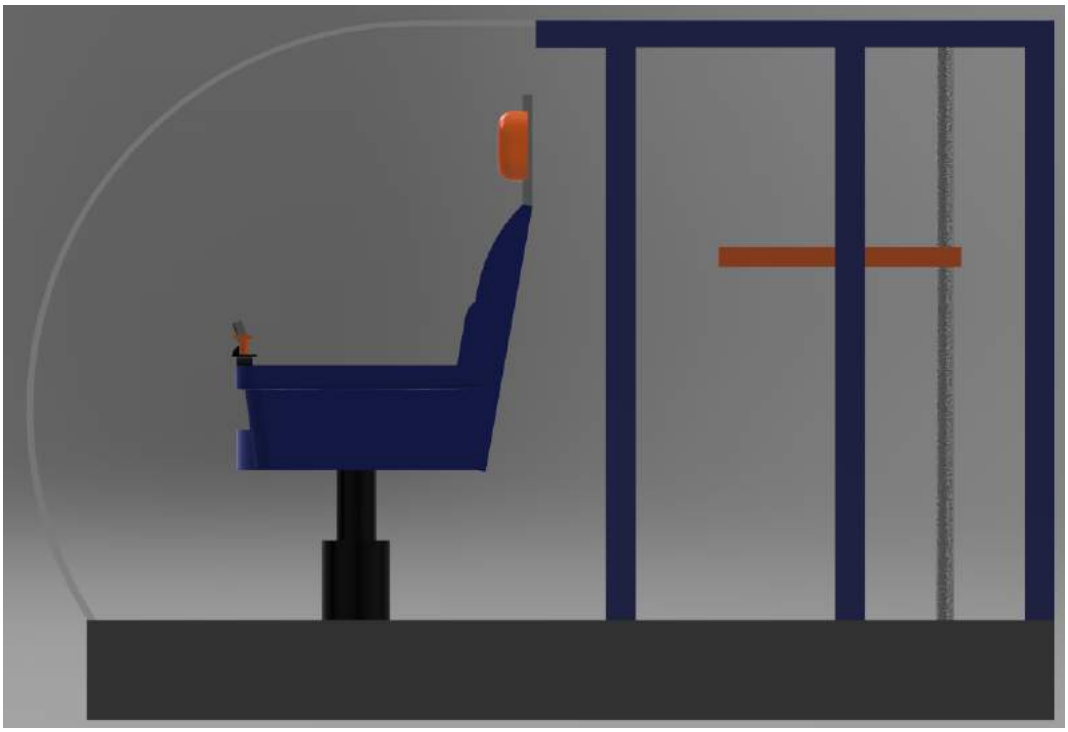

Figure 4- COD POD Interior CAD Rendering (Side)

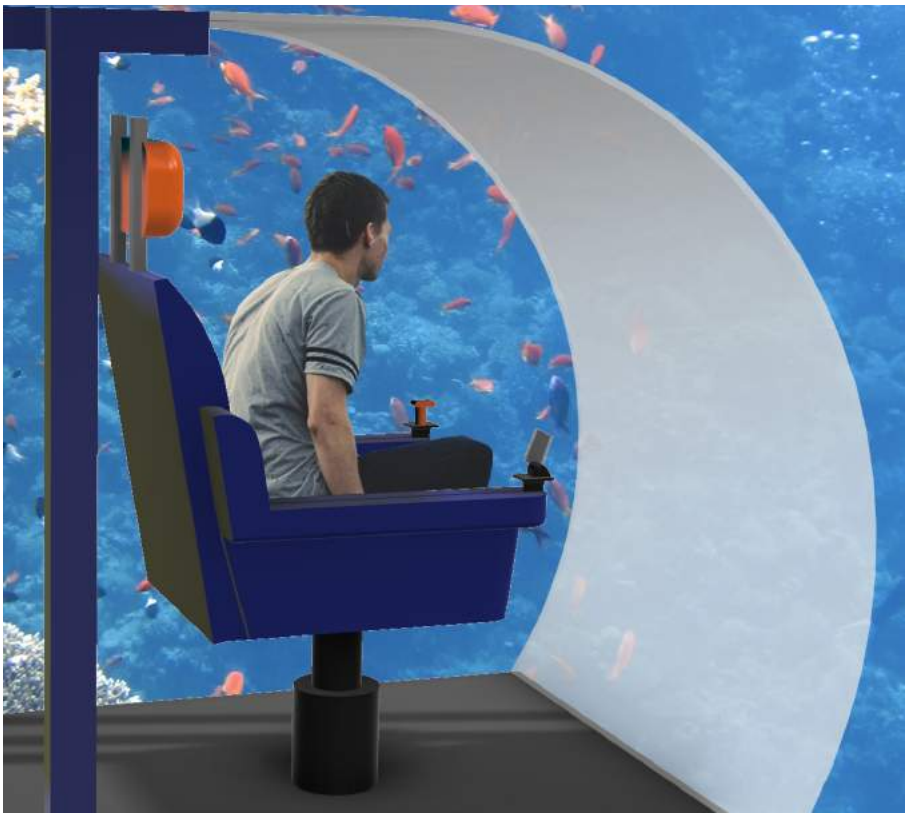

Figure 5- COD POD Interior Usage CAD Rendering

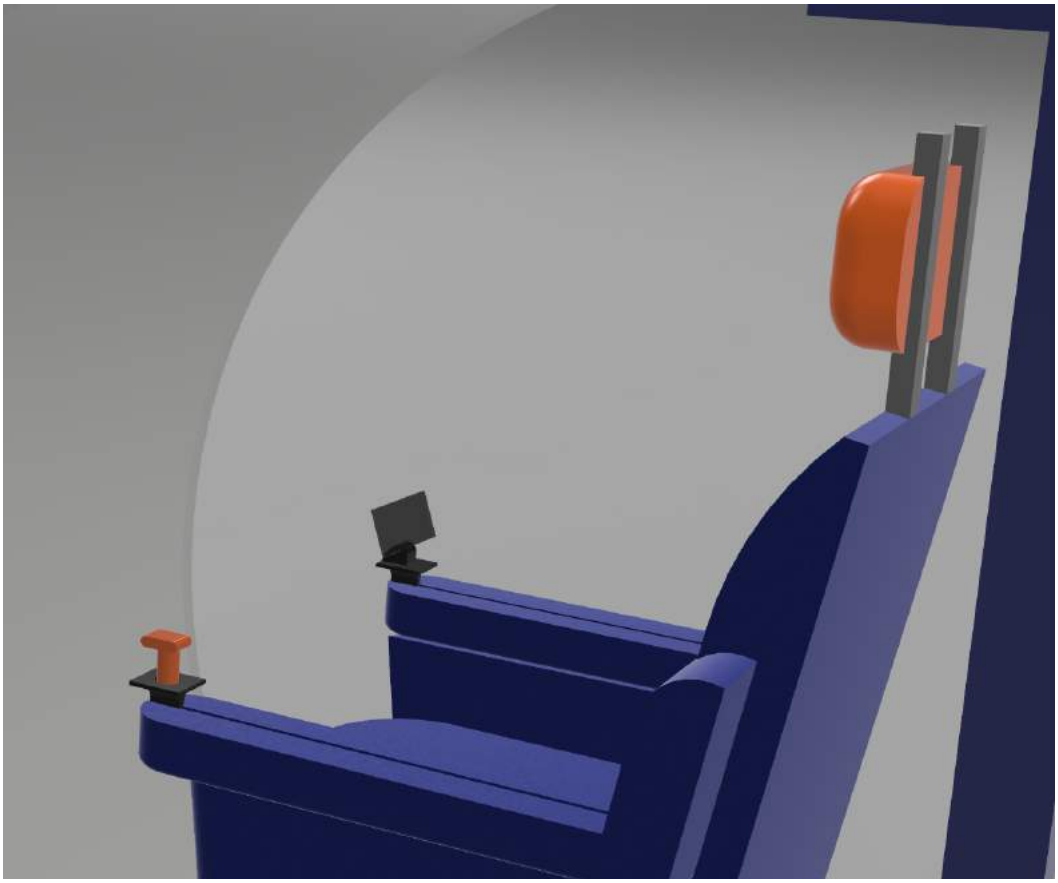

Figure 6- COD POD Interior Chair

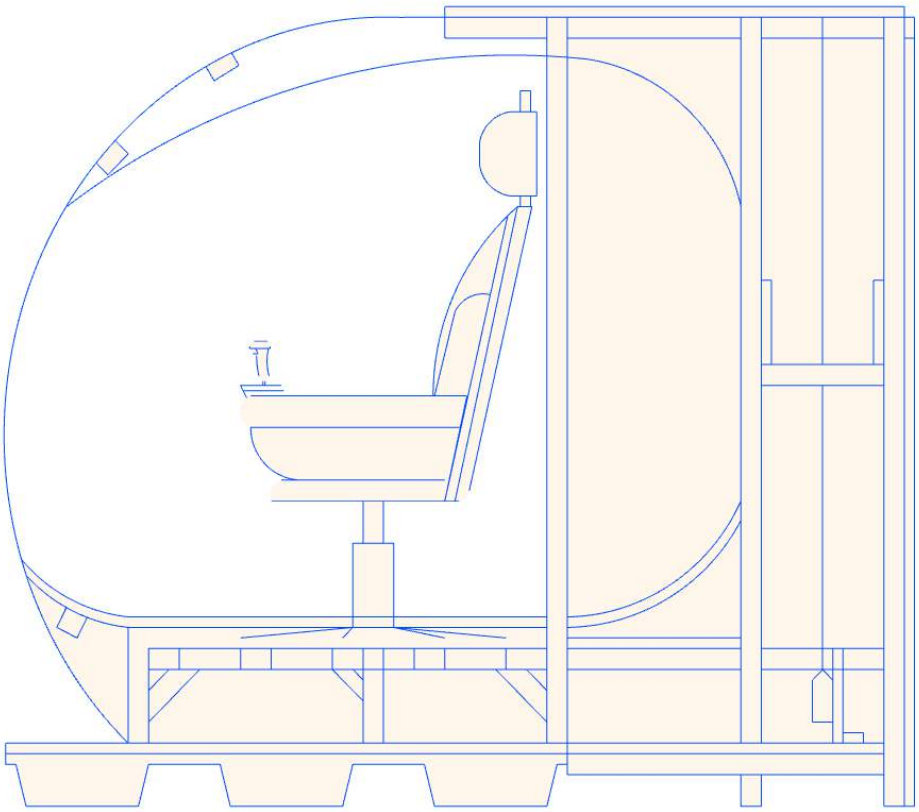

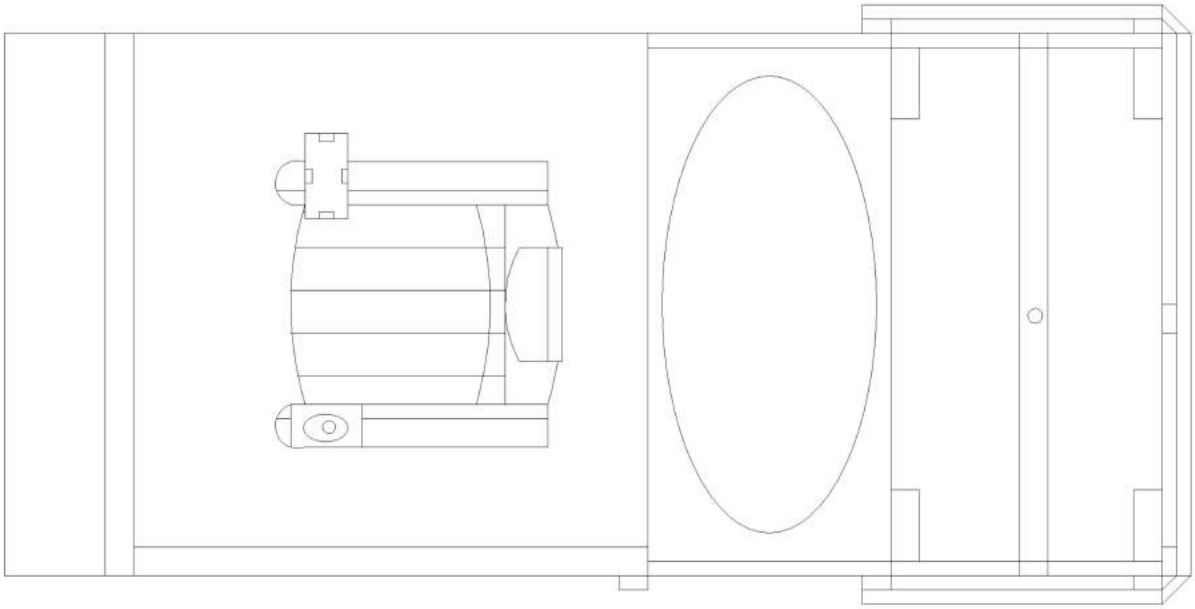

Figure 8- COD POD Build Detail Drawing (Top View)

Figure 9- COD POD Rendering Interior

Deonstration/Visualisation Of Key Scenarios Of Us

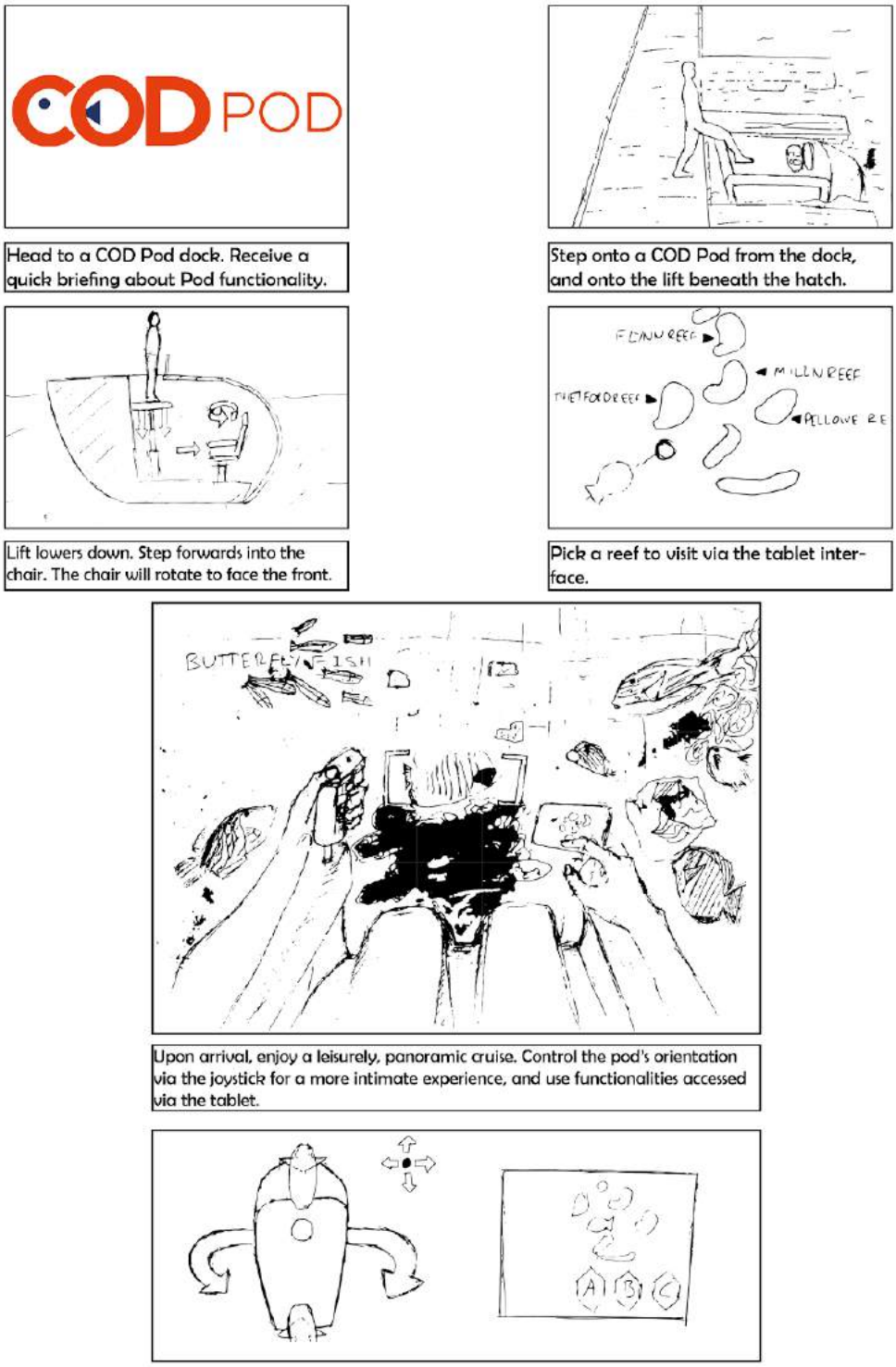

Figure 10- COD POD Visual Storyboard

Conclusion (Next Steps)

Report On Effectiveness Of Development Work

Our user testing methods were very effective at highlighting areas of our concept that we had not properly thought about, but that required attention. The methods of questioning revolved around the user being in our mock-up. We asked the test subject to sit in our mock-up, then asked a series of questions about what is intuitive to them, their experience sitting in the chair, and lastly, we asked a general question about how we could improve their experience. The last question provided very mixed results, as every subject had a different view, but the general themes could accurately be extracted to help improve our COD Pod. We believe this method was very effective at obtaining feedback quickly from test subjects for the physical build. However, more testing with a mock-UI in place would have helped us fine tune the intuitiveness of the UI further.

This emphasis on the physical build of the COD Pod was also shown in our concept generation sessions. This is due to us making UI features that helped support the physical improvements we wanted to make. While this resulted in an ambitious yet successful build, it did result in our UI being technology centered. As discussed previously, in the UI development section, we quickly corrected this mistake when it was revealed through user testing.

Identification Of Areas For Further Development

We recognise that our mock-up is not the finished product, and so, while making it we discovered areas that would require further development when the COD Pod becomes a finished product. The first is the user interface. While we have tested and iterated upon it, a more substantial and overall finished version would need to be further developed for use in the real COD Pod. Only so much user testing can be done while outside the water in simulated environments, the final version should be tested with the users underwater. We think this might drastically improve the user experience.

The second is the lift mechanism. The one included in our mock-up is just one that could be easily built in the space and with the machinery provided. If used in the real COD Pod, it would be too slow and not properly support a above average user's weight. A different lifting mechanism would be required to decrease lift time, ideally hydraulics which are widely used. A further point in the lift development is that some users may require support while travelling down the lift. We feel these supports may need further development and user testing to find the ones that support the user the best.

The last, is the lack of a full sphere in our mock-up. We feel having a complete glass dome in a mock-up for the COD Pod will change the user's perception of the experience. A complete mock-up will need to be user tested to fully develop the COD Pod.

Overall we are satisfied with our innovative concept, development process and final mock-up of our COD Pod. We believe that COD Pod could revolutionise reef tourism, and help protect one of the world's greatest wonders.

Appendices

Calendar Of Key Dates/Decisions

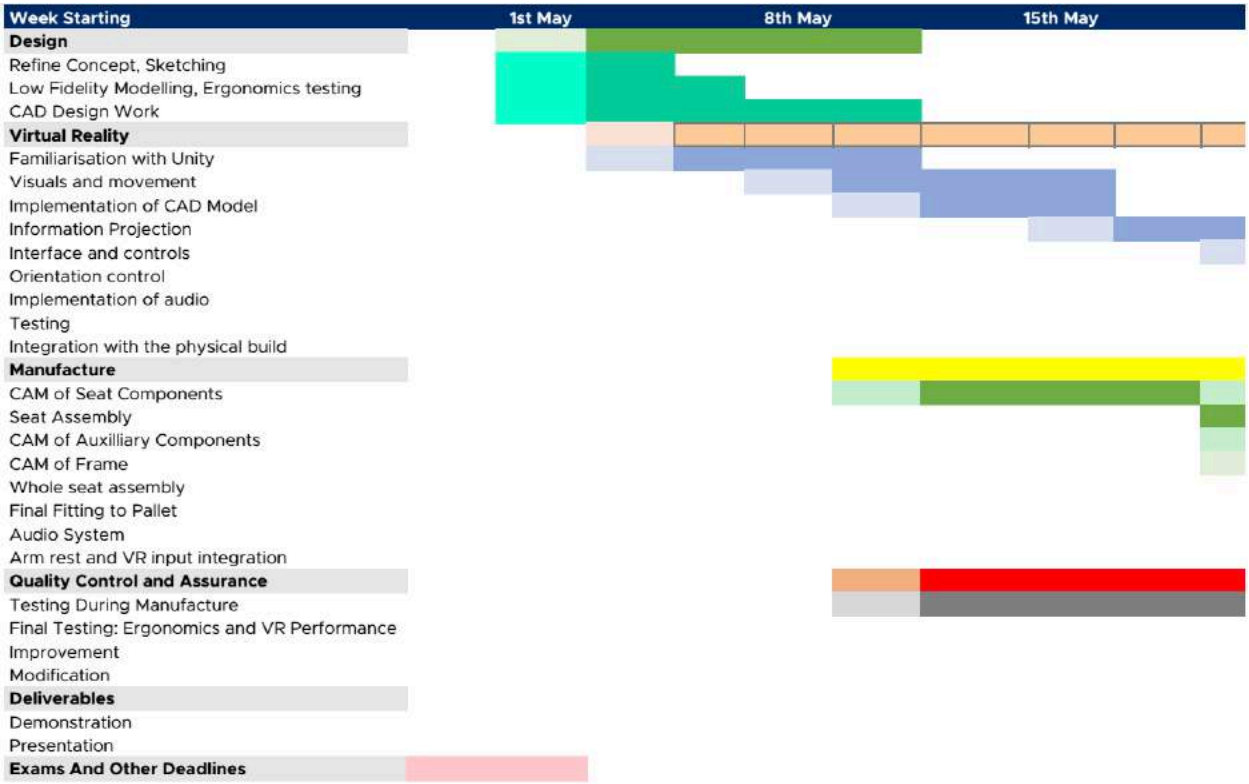

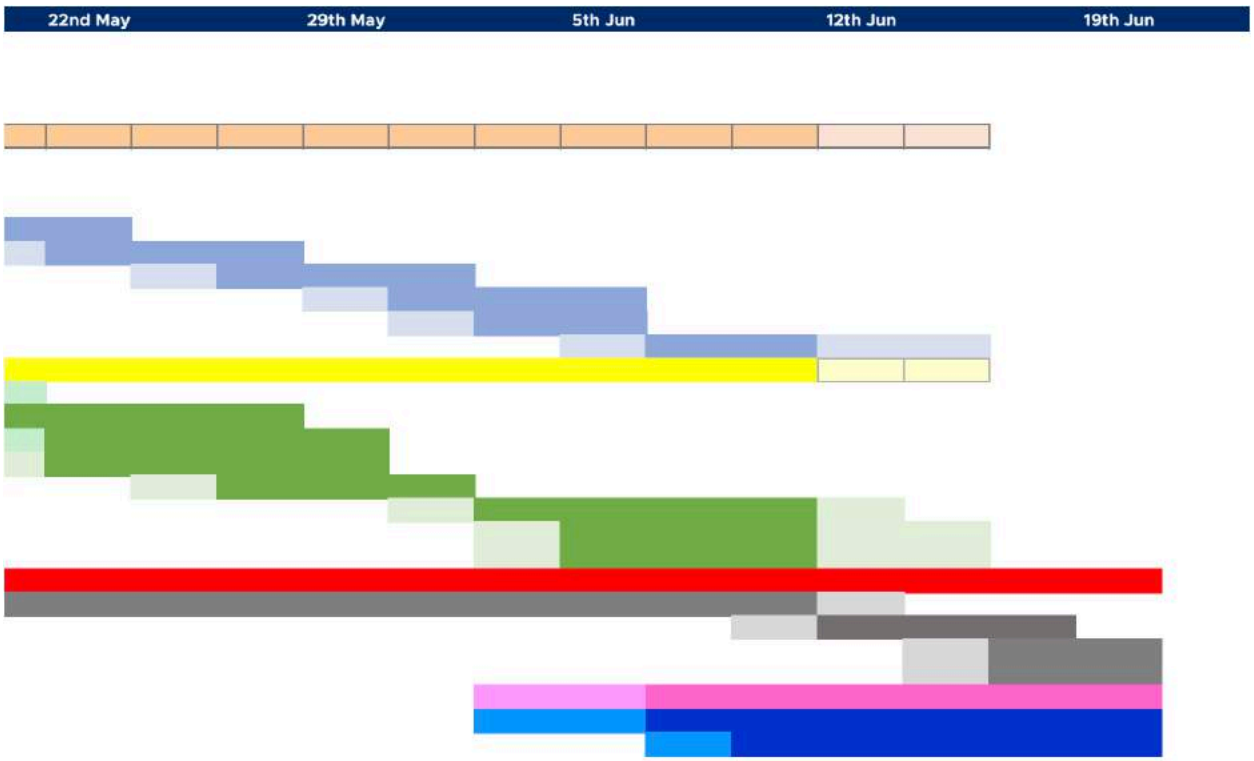

Anthropometric Data

Source: https://multisite.eos.ncsu.edu/www-ergocenter-ncsu-edu/wp-content/uploads/sites/18/2016/06/Anthropometric-Detailed-Data-Tables.pdf

Team Contributions

All - concept inception, creativity, time management, mock-up building, user testing, design development, report writing

- Federico Tiersen - research and development, real-life experience
- Oliver Thompson - workshop experience, leadership
- Omer Quadri - graphic design, CAD
- Robert Hyde - concept generation, communication
- Ryan Dai - organisation, programming/electronics

Acknowledgements

A special thanks to all supervisors and third party inputs that have made COD Pod possible: Stephen Green, Wexton Baxter, Veranika Lim, Aran Kumar K Dasan, Ingrid Logan, Tony Watson, Gordon Addy, Joseph Giacomin, YeaWon Choi.